PRESIDENT
Elizabeth J. Kazinskas

COUNCILLORS AT LARGE
James S. Boone
Craig R. Cormier
Ronald F. Cormier
Scott Joseph Graves, Esq.
Judy A. Mack
George C. Tyros

WARD 1 COUNCILLOR
James M. Walsh, Esq.

WARD 2 COUNCILLOR
Elizabeth J. Kazinskas

WARD 3 COUNCILLOR
Nathan R. Boudreau

WARD 4 COUNCILLOR
Karen G. Hardern

WARD 5 COUNCILLOR
Alek Dernalowicz, Esq.

CITY OF GARDNER
MASSACHUSETTS 01440-2630

OFFICE OF THE
CITY COUNCIL

RECEIVED
2020 JUN 26 AM 10: 50
CITY CLERK'S OFFICE
GARDNER, MA

June 26, 2020

PUBLIC SERVICE COMMITTEE MEETING

Date: Wednesday, July 1, 2020
Time: 4:30 P.M.
Location: Remotely*

ANNOUNCEMENT - Any person may make a video or audio recording of an open session of a meeting, or may transmit the meeting through any medium, subject to reasonable requirements of the chair as to the number, placement and operation of equipment used so as not to interfere with the conduct of the meeting. Any person intending to make such recording shall notify the Chair forthwith. All Documents referenced or used during the meeting must be submitted in duplicate to the Chair, pursuant to the Open Meeting and Public Records Law. All documents shall become part of the official record of the meeting.

AGENDA

1. Review and Approval of the Minutes of the prior meeting.
2. Department Updates:
   Public Works/Sewer/Water – Dane Arnold, DPW Director
   Survey/Engineering – Chris Coughlin, City Engineer
   Conservation Commission – Lyndsy Butler, Conservation Agent
3. Abatements Water/Sewer
4. #10288, Petition by National Grid for permission to install 197' of conduit starting at 370 Park Street and heading north to pole 40 Clark Street.
5. Water Department Loan Order Request for 2 Items.
6. Councillor Requests
7. Adjournment

***NOTICE:** The listing of Agenda items are those reasonably anticipated by the Chairman which may be discussed at the meeting. Not all items listed may in fact be discussed and other items not listed may also be brought up for discussion to the extent permitted by law.*

CITY COUNCIL OF GARDNER

Nathan R. Boudreau

Nathan R. Boudreau
Chairman, Public Service Committee

**Pursuant to Governor Baker's March 12, 2020 Order Suspending Certain Provisions of the Open Meeting Law, G.L. c. 30A, §20, and the Governor's March 15, 2020 Order imposing strict limitation on the number of people that may gather in one place, this meeting of the Committee will be conducted via remote participation and broadcast live on Gardner YouTube Channel. The audio recording, transcript, or other comprehensive record of proceedings will be posted on the City's website as soon as possible after the meeting.*

REGULAR MEETING PUBLIC SERVICE COMMITTEE of MAY 13, 2020

Meeting of the Public Service Committee was held via remotely by phone at the DPW 50 Manca Drive at 4:30 PM on May 13, 2020.

Members Present via telephone: Councilor Nathan Boudreau, Chairman; Councilor Karen Hardern, Councilor Judy Mack, Adm. Assistant Denise Merriam

Dane E. Arnold, DPW Director, Chris Coughlin City Engineer, Christine Harty

CALL TO ORDER

Councilor Nathan Boudreau called the meeting to order at 4:30 pm.

OPEN MEETING RECORDING

ANNOUNCEMENT – any person may make a video or audio recording of an open session of a meeting, or may transmit the meeting through any medium, subject to reasonable requirements of the chair as to the number, placement and operation of equipment used so as not to interfere with the conduct of the meeting. Any person intending to make such recording shall notify the chair forthwith. All Documents referenced or used during the meeting must be submitted in duplicate to Secretary of the Committee, pursuant to the Open Meeting and Pubic Records Law. All documents shall become part of the official record of the meeting.
No one is recording the meeting.

ACCEPTANCE OF MINUTES

Motion to accept the minutes of the February 25, 2020 meeting as written Councilor Karen Harder second by Councilor Nathan Boudreau. Roll Call Councilor Karen Hardern yes, Councilor Judy Mack yes, Councilor Nathan Boudreau yes, motion passes

ORDINANCE ISSUE

Request from Resident of 15 Greenwood Street wants to convert to Gas in his house the road has been paved within 5 years requesting waiver to dig in street. Dane stated that road was paved in 2016 almost five years not an emergency but he has no objection. Motion made by Councilor Karen Hardern second by Councilor Judy Mack to allow the resident to have the Gas installed. Roll Call Councilor Keren Hardern yes, Councilor Judy Mack yes, Councilor Nathan Boudreau yes. Motion passes.

SEWER/WATER ISSUES
REPORTS FROM DEPARTMENT HEADS

Dane Arnold: Denise is retiring after 45 years of service to the City, Christine Harty will be taking over her position.
Water/Sewer project downtown: the sewer was completed today, water continuing they have run into a lot of ledge on Nichols St. and City Hall Ave. once this is done we will pave with a base coat around July or August and then next spring put final coat on.
Hope to be start paving streets within next couple months Kelton is going to be pulverized and level off with grader. Councilor Mack asked if she could have a list of the streets that will be paved this year. Dane sent the list to all three

DRAFT

Councilors. Dane not sure how much will be done because he has not received final amount of money from the State yet.
Ovila Case Playground still working on we received a Grant for $45,000, Rock Fund Donation of $10,000 and City budget of $25,000 to replace playground equipment. If we should are able to get more on a grant we will replace more.
Waiting for the list of trees for the solar field and compiling a list of City trees to have another Public Hearing.
Have a deficit in Snow & Ice Account of about $275,000 waiting for new Mayor to send letter to Finance Committee. Councilor Boudreau we had a light winter not too bad, Dane stated we had a lot of ice.
Money Orders going up some Union Contract items that need to be covered.

Chris Coughlin: In March had a public hearing with Mass DOT regarding uptown rotary 25% design stage moving forward. Will inform committee when next hearing is.
Wright's Reservoir Dam project 95% completed spillway done.
Workshop for MVB to get access for a lot of money for culverts, dams, etc.
National Grid Pole approved by Chris. Motion made by Councilor Judy Mack second by Councilor Karen Hardern to accept National Grid Pole Request. Roll Call Councilor Karen Hardern yes, Councilor Judy Mack yes, Councilor Nathan Boudreau yes. Motion passes.

MONEY ORDERS

REPORTS & REQUESTS FROM COUNCILOR'S

Councilor Boudreau: Contractor did some work on Jean St. the sidewalk needs to be fixed. Dane said we are monitoring it.
Councilor Hardern: Are you paving Harvard and Baker Street.
Councilor Judy Mack: Guard Rail at Crystal Lake Cemetery, Dane stated we are putting in large rocks. Councilor Mack stated needs to be closed hazard.

Motion made by Councilor Judy Mack second by Councilor Karen Hardern to adjourn meeting at 4:52 pm. Roll Call vote: Councilor Karen Hardern yes, Councilor Judy Mack yes, Councilor Nathan Boudreau yes. Motion passes.

Next meeting scheduled as needed.

All documents submitted at this meeting are stored in the office of the DPW 50 Manca Drive for any review.

Respectfully submitted:
Denise M. Merriam, Administrative Assistant

DRAFT

10288

RECEIVED

2020 MAY 18 AM 9:42

CITY CLERK'S OFFICE
GARDNER, MA

Questions contact – Douglas Hyland 781-423-3076

Petition of the NATIONAL GRID
Of NORTH ANDOVER, MASSACHUSETTS
For Electric conduit Location:

To the City Council of Gardner, Massachusetts

Respectfully represents the NATIONAL GRID of North Andover, Massachusetts, that it desires to construct a line of underground electric conduits, including the necessary sustaining and protecting fixtures, under and across the public way or ways hereinafter named.

Wherefore it prays that after due notice and hearing as provided by law, it be granted permission to excavate the public highways and to run and maintain underground electric conduits, together with such sustaining and protecting fixtures as it may find necessary for the transmission of electricity, said underground conduits to be located substantially in accordance with the plan filed herewith marked – Park Street & Clark Street - Gardner – Massachusetts.

The following are the streets and highways referred to: Plan number # 28039529
Park Street & Clark Street - National Grid to install ~197' of conduit starting at 370 Park Street and heading north to pole 40 Clark St.

Location approximately as shown on plan attached

NATIONAL GRID
BY Pat Cody
Engineering Department

Dated: May 13, 2020

CITY OF GARDNER
MASSACHUSETTS 01440-2630

OFFICE OF THE
CITY CLERK
Room 121, City Hall
Tel (978) 630-4058
Fax (978) 630-2589

NOTICE TO ABUTTERS

June 22, 2020

TO ABUTTERS AND OTHER INTERESTED PARTIES:

Pursuant to the provisions of M.G.L. c. 166, §22, you are hereby notified that a Public Hearing will be conducted via Remote Participation* on **Monday, July 6, 2020** at **7:30 o'clock P.M.** on the petition of **NATIONAL GRID** for permission to construct a line of underground conduits, including the necessary sustaining and protecting fixtures, under along and across the following public way(s):

> PARK STREET and CLARK STREET- National Grid to install ~197 feet of conduit starting at 370 Park Street and heading north to Pole 40 Clark Street.

Engineering sketches of the proposed conduit are attached for your information.

*The Public Hearing will be conducted via ***Zoom*** Video Conferencing and broadcast live on Gardner Educational Television Channel 8 and on the City's YouTube Channel. Parties interested in testifying before the City Council are requested to contact City Clerk Alan Agnelli by calling **978-630-4058** or by e-mail at **aagnelli@gardner-ma.gov** to register and to obtain participation/call-in instructions.

CITY COUNCIL OF GARDNER

By: ALAN L. AGNELLI
City Clerk

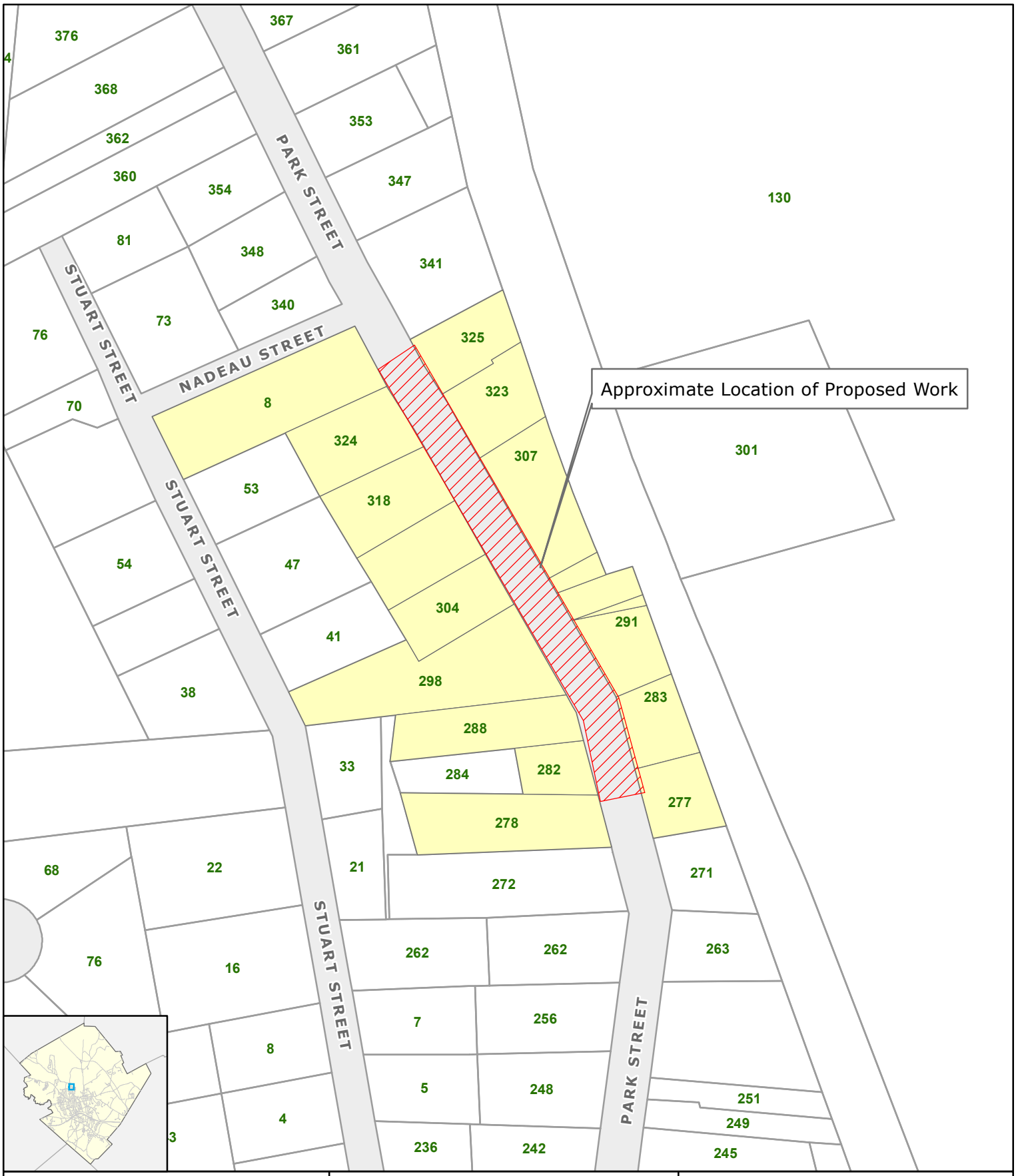

Proposed Work Area
Abutters
Parcels

ABUTTER'S LIST (UTILITY)

PARK STREET

CITY OF GARDNER
95 Pleasant Street
Gardner, MA 01440

0 75 150 Feet

Data Sources
City of Gardner Engineering, Office of Geographic and Environmental Information (MassGIS), Commonwealth of Massachusetts, EOEA

City of Gardner Geographic Information Systems GIS

G:\Projects\Abutters\Maps\fy20\ParkPole.mxd 6/18/2020

TJA SOLAR INTERCONNECTION
GARDNER, MA
W/R# 28039529

STREET MAP
LOCUS OF PROJECT

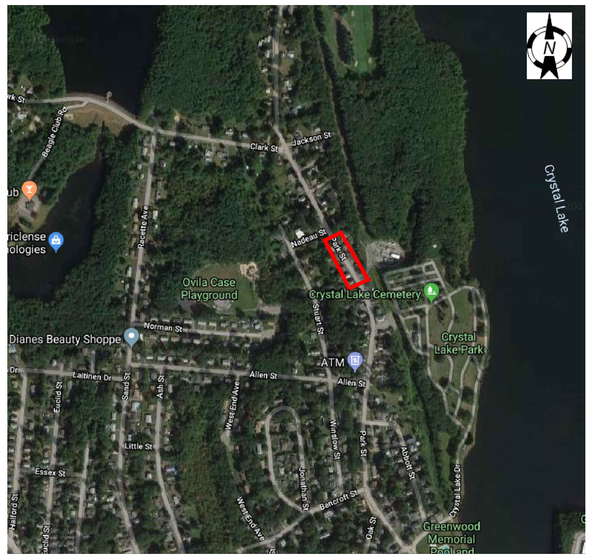

SHEET NUMBER	SHEET NAME
TITLE	COVER SHEET
INDEX	INDEX MAP
1	PARK STREET - CONDUIT PLAN
DETAILS	DETAILS PAGE

GENERAL NOTES

1. THE SURVEYOR MAKES NO GUARANTEE OR WARRANTY THAT THE UNDERGROUND UTILITIES DEPICTED COMPRISE ALL SUCH UTILITIES IN THE AREA, EITHER IN SERVICE OR ABANDONED. THE SURVEYOR FURTHER DOES NOT GUARANTEE OR WARRANT THAT THE UNDERGROUND UTILITIES DEPICTED ARE IN THE EXACT LOCATION INDICATED. UTILITIES ARE DEPICTED IN ACCORDANCE WITH THE STANDARD OF CARE, FROM INFORMATION AVAILABLE.
2. THE CONTRACTOR SHALL UTILIZE "CALL BEFORE YOU DIG", "ONE CALL", OR LOCAL EQUIVALENT, PRIOR TO EXCAVATION, FOR THE PURPOSE OF VERIFYING THE SUBSURFACE UTILITIES IN THE AREA. IN AREAS WHERE THE "CALL BEFORE YOU DIG", "ONE CALL", OR LOCAL EQUIVALENT DOES NOT RESPOND, THE CONTRACTOR SHALL VERIFY THE LOCATIONS OF THE EXISTING UTILITIES, IN ACCORDANCE WITH THE OWNER'S CONTRACT AND ALL APPLICABLE LAWS AND REGULATIONS, INCLUDING OSHA.
3. INDIVIDUAL COMPONENTS OF UTILITIES AND RELATED STRUCTURES MAY EXIST ABOVE OR BELOW GRADE ON OR NEAR THE STRUCTURES AND MAY NOT BE DEPICTED. THESE MAY INCLUDE BUT ARE NOT LIMITED TO GROUND WIRES, STRUCTURAL SUPPORT, AND CATHODIC PROTECTION. THE CONTRACTOR SHALL 1) CONTACT THE OWNER OF THE UTILITY PRIOR TO EXCAVATION FOR INSTRUCTION REGARDING HAZARDS ASSOCIATED WITH, AND SPECIFIC PRECAUTIONS TO BE UTILIZED WHEN WORKING AT OR NEAR, SUCH FACILITIES AND 2) EXERCISE THE APPROPRIATE STANDARD OF CARE REQUIRED IN ACCORDANCE WITH ALL APPLICABLE LAWS AND REGULATIONS, INCLUDING OSHA, WHEN EXCAVATING IN THE VICINITY OF A UTILITY AND/OR ITS RELATED STRUCTURES.

PROJECT DESCRIPTION:
–INSTALL ~197' LINEAR FEET OF TRENCHING

PROPRIETARY NOTICE

THIS DOCUMENT WHICH CONTAINS CONFIDENTIAL AND TRADE SECRET INFORMATION, IS THE PROPERTY OF CONTROLPOINT TECHNOLOGIES, INC., AND IS GIVEN TO THE RECEIVER IN CONFIDENCE. THE RECEIVER, BY RECEPTION AND RETENTION OF THE DOCUMENT, ACCEPTS THE DOCUMENT IN CONFIDENCE, AND AGREES THAT, EXCEPT IF AUTHORIZED IN WRITING BY CONTROLPOINT TECHNOLOGIES, INC., IT (1) NOT USE THE DOCUMENT OR ANY COPY THEREOF, OR THE CONFIDENTIAL TRADE SECRET INFORMATION THEREIN, (2) NOT COPY THE DOCUMENT, (3) DISCLOSE TO OTHERS EITHER THE DOCUMENT OR THE CONFIDENTIAL TRADE SECRET INFORMATION THEREIN, AND (4) UPON COMPLETION OF THE NEED TO RETAIN THE DOCUMENT, OR UPON DEMAND, RETURN THE DOCUMENT, ALL COPIES THEREOF, AND ALL MATERIAL COPIED THEREFROM. COPYRIGHT © CONTROLPOINT TECHNOLOGIES, INC., ALL RIGHTS RESERVED.

REV	DESCRIPTION	DATE	CADD	ENGINEER	APPROVED
1	RISER POLE LOCATION CHANGE	4/14/20	DH	TK	TK
0	INITIAL DRAWING RELEASE	8/20/19	DH	TK	TK

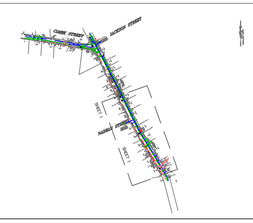

ControlPoint TECHNOLOGIES
200 LEDGEWOOD PLACE (SUITE 300)
ROCKLAND, MA 02370
TEL: (781)-423-3076
EMAIL: DHYLAND@CPTENG.COM
ENGINEER: DOUG HYLAND

nationalgrid

TJA SOLAR INTERCONNECTION
GARDNER, MA
W/R# 28039529

SCALE:	DWG NO:	SHT:	REV:
NTS	28039539	TITLE	1

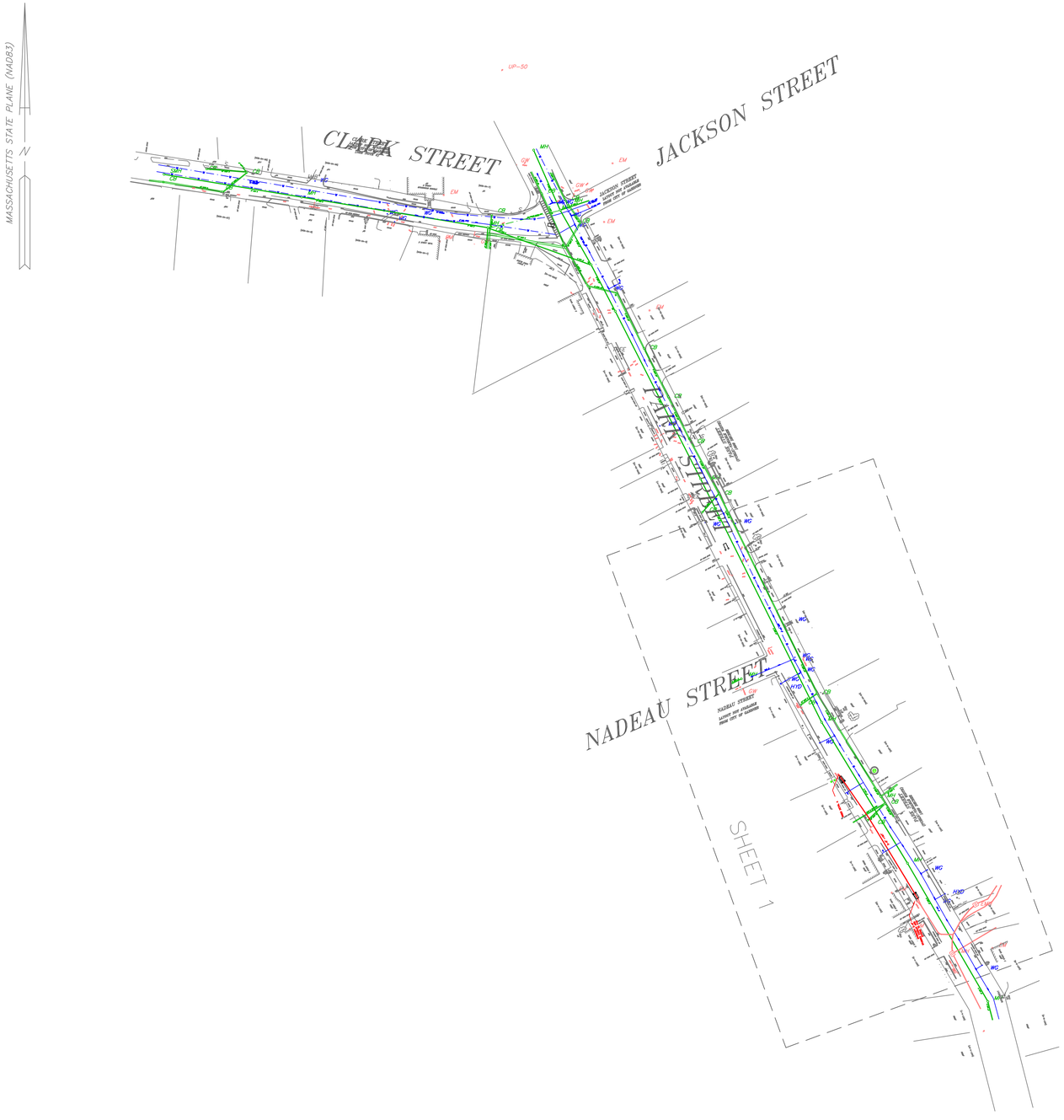

LEGEND

CB	CATCH BASIN	BIT CONC	BITUMINOUS CONCRETE
10" SURF D MH	DRAIN LINE/MANHOLE	(BY REC)	BY RECORD
EMH	ELECTRIC LINE/MANHOLE	CONC	CONCRETE
12" SAN S MH	SEWER LINE/MANHOLE	CRW	CONCRETE RETAINING WALL
8" DICL WG	WATER LINE/GATE	CS	CONCRETE STAIRS
HYD	HYDRANT	DICL	DUCTILE IRON CEMENT LINED
LP	LIGHT POLE	EM	ELECTRIC METER
UP	UTILITY POLE	EOP	EDGE OF PAVEMENT
GP	GUY POLE	EOG	EDGE OF GRAVEL
UPL	UTILITY POLE w/LIGHT	EPM	ELECTRIC PAINT MARK
UPR	UTILITY POLE w/RISER	LS	LANDSCAPED
UPT	UTILITY POLE w/TRANSFORMER	MB	MAILBOX
GW	GUY WIRE	S	SIGN
OHW	OVERHEAD WIRE	SRW	STONE RETAINING WALL
BCB	BITUMINOUS CONCRETE BERM	SS	STONE STAIRS
CCB	CAPE COD BERM	SWL	SINGLE WHITE LINE
EOG	EDGE OF GRAVEL	TRW	TIMBER RETAINING WALL
CLF	CHAIN LINK FENCE	WPM	WATER PAINT MARK
MWF	METAL WIRE FENCE	WS	WOOD STAIRS
VPF	VINYL PICKET FENCE		BUILDING
WPF	WOOD POST FENCE		STREET LINE
WSF	WOOD STOCKADE FENCE		ABUTTER LINE (APPROXIMATE)
	SHRUBS	DH	DRILL HOLE
	TREE LINE	IP	IRON PIN/IRON PIPE
	BUSH	FND	FOUND
	TREE	[M38-9-15]	ASSESSOR ID NUMBER
		#107	PARCEL ADDRESS
		(110) N:2922305.35 E:574073.32	TRAVERSE/MONUMENT W/ STATE PLANE COORDINATE
		MN/S	MAG NAIL SET

NOTES

1) UNDERGROUND UTILITIES WERE COMPILED IN PART FROM "PAINT MARKS" AND AVAILABLE RECORD PLANS OF UTILITY COMPANIES AND ARE APPROXIMATE ONLY. BEFORE CONSTRUCTION CALL "DIG SAFE" 1-888-344-7233. SOME DATA IS CONFLICTING AND CAN ONLY BE VERIFIED BY EXCAVATION.

2) THIS PLAN WAS PREPARED FROM AN ACTUAL SURVEY MADE ON THE GROUND USING A TRIMBLE S8 ROBOTIC TOTAL STATION ON OR BETWEEN MAY 7, 2019 AND JULY 5, 2019.

3) HORIZONTAL COORDINATE SYSTEM, STATE PLANE, NAD83 (MASSACHUSETTS MAINLAND), ESTABLISHED BY GPS-OPUS METHODS, NAD_83(2011) (EPOCH2010).

4) ABUTTER LINEWORK IS COMPILED FROM ASSESSOR LINEWORK AND IS APPROXIMATE.

5) THE CITY OF GARDNER DID NOT HAVE ANY RECORD INFORMATION FOR CLARK STREET. CLARK STREET WAS ESTABLISHED BY OCCUPATION AND AN ASSUMED WIDTH OF FORTY FEET.

PROPRIETARY NOTICE

THIS DOCUMENT WHICH CONTAINS CONFIDENTIAL AND TRADE SECRET INFORMATION, IS THE PROPERTY OF CONTROLPOINT TECHNOLOGIES, INC., AND IS GIVEN TO THE RECEIVER IN CONFIDENCE. THE RECEIVER, BY RECEPTION AND RETENTION OF THE DOCUMENT, ACCEPTS THE DOCUMENT IN CONFIDENCE, AND AGREES THAT, EXCEPT IF AUTHORIZED IN WRITING BY CONTROLPOINT TECHNOLOGIES, INC., IT (1) NOT USE THE DOCUMENT OR ANY COPY THEREOF, OR THE CONFIDENTIAL TRADE SECRET INFORMATION THEREIN, (2) NOT COPY THE DOCUMENT, (3) DISCLOSE TO OTHERS EITHER THE DOCUMENT OR THE CONFIDENTIAL TRADE SECRET INFORMATION THEREIN, AND (4) UPON COMPLETION OF THE NEED TO RETAIN THE DOCUMENT, OR UPON DEMAND, RETURN THE DOCUMENT, ALL COPIES THEREOF, AND ALL MATERIAL COPIED THEREFROM. COPYRIGHT © CONTROLPOINT TECHNOLOGIES, INC., ALL RIGHTS RESERVED.

REV	DESCRIPTION	DATE	CADD	ENGINEER	APPROVED
1	RISER POLE LOCATION CHANGE	4/14/20	DH	TK	TK
0	INITIAL DRAWING RELEASE	8/20/19	DH	TK	TK

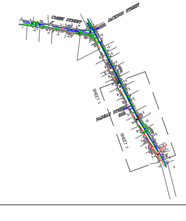

ControlPoint TECHNOLOGIES

200 LEDGEWOOD PLACE (SUITE 300)
ROCKLAND, MA 02370
TEL: (781)-423-3076
EMAIL: DHYLAND@CPTENG.COM
ENGINEER: DOUG HYLAND

nationalgrid

TJA SOLAR INTERCONNECTION
GARDNER, MA
W/R# 28039529

SCALE:	DWG NO:	SHT:	REV:
NTS	28039539	INDEX	1

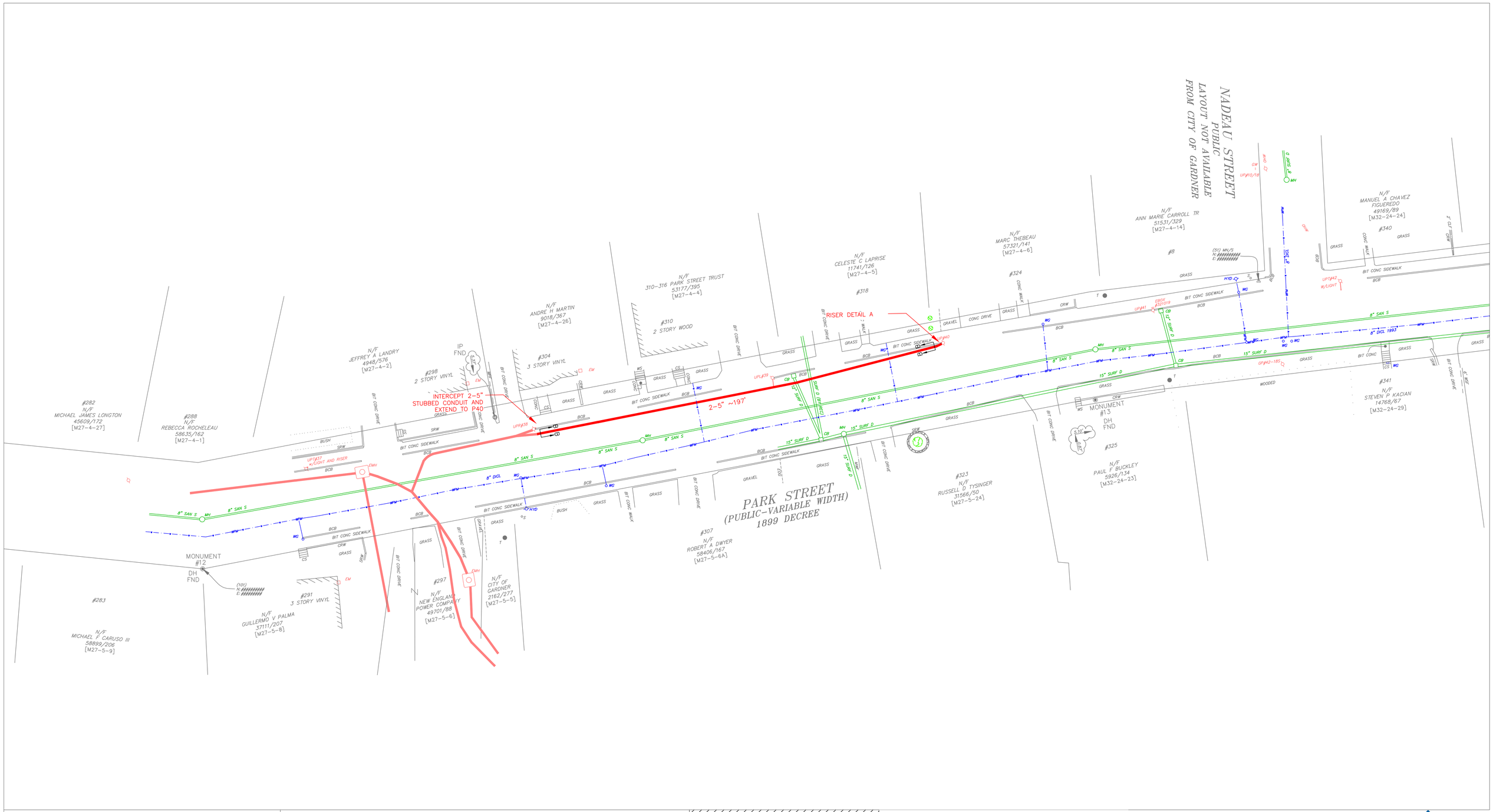

PROPRIETARY NOTICE

THIS DOCUMENT WHICH CONTAINS CONFIDENTIAL AND TRADE SECRET INFORMATION, IS THE PROPERTY OF CONTROLPOINT TECHNOLOGIES, INC., AND IS GIVEN TO THE RECEIVER IN CONFIDENCE. THE RECEIVER, BY RECEPTION AND RETENTION OF THE DOCUMENT, ACCEPTS THE DOCUMENT IN CONFIDENCE, AND AGREES THAT, EXCEPT IF AUTHORIZED IN WRITING BY CONTROLPOINT TECHNOLOGIES, INC., IT (1) NOT USE THE DOCUMENT OR ANY COPY THEREOF, OR THE CONFIDENTIAL TRADE SECRET INFORMATION THEREIN, (2) NOT COPY THE DOCUMENT, (3) DISCLOSE TO OTHERS EITHER THE DOCUMENT OR THE CONFIDENTIAL TRADE SECRET INFORMATION THEREIN, AND (4) UPON COMPLETION OF THE NEED TO RETAIN THE DOCUMENT, OR UPON DEMAND, RETURN THE DOCUMENT, ALL COPIES THEREOF, AND ALL MATERIAL COPIED THEREFROM. COPYRIGHT © CONTROLPOINT TECHNOLOGIES, INC., ALL RIGHTS RESERVED.

REV	DESCRIPTION	DATE	CADD	ENGINEER	APPROVED
1	RISER POLE LOCATION CHANGE	4/14/20	DH	TK	TK
0	INITIAL DRAWING RELEASE	8/20/19	DH	TK	TK

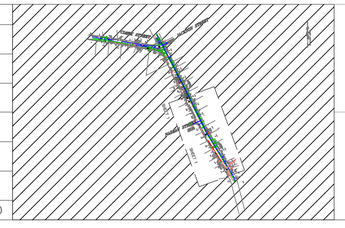

ControlPoint TECHNOLOGIES
200 LEDGEWOOD PLACE (SUITE 300)
ROCKLAND, MA 02370
TEL: (781)-423-3076
EMAIL: DHYLAND@CPTENG.COM
ENGINEER: DOUG HYLAND

nationalgrid

TJA SOLAR INTERCONNECTION
GARDNER, MA
W/R# 28039529

SCALE:	DWG NO:	SHT:	REV:
NTS	28039539	1	1

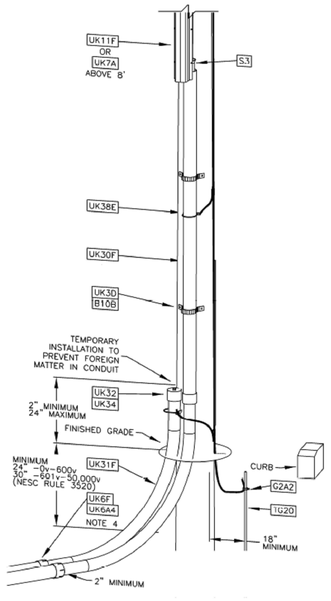

5" RISER

- PVC CONDUIT TYPE DB (5")
  –STD Item * UK6A5
- PVC female adapter to go from PVC to threaded steel (5')
  –STD Item * UK6F5
- 90 degree galvanized steel sweep (5")
  –STD Item * UK31G2
- Galvanized steel conduit coupling (5")
  –STD Item * UK32G
- Galvanized steel plug
  –STD Item * UK34G
- Galvanized steel conduit (5")
  – STD Item * UK30G
- Galvanized steel conduit clip (5")
  – STD Item * UK3E
- Galvanized steel lag screw with a hex head and a steel/neoprene washer (length = 2" diameter = $\frac{1}{4}$")
  –STD Item * B10B
- Conduit ground clamp (5")
  –STD Item * UK38F

TYPICAL CONDUIT TERMINATION DETAIL 'A'

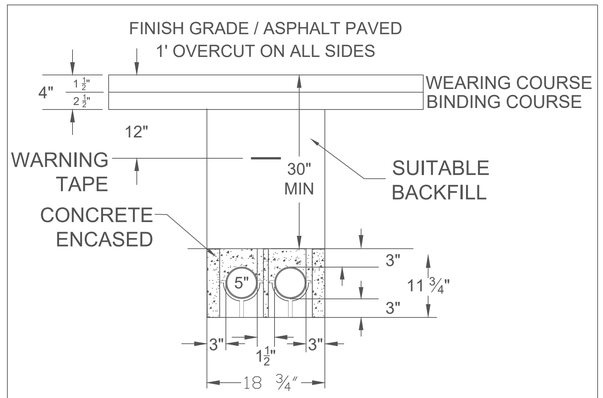

DUCT PROFILE 'B–B'
2–5"

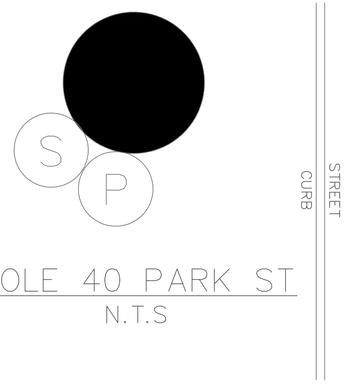

POLE 40 PARK ST
N.T.S

PROPRIETARY NOTICE

THIS DOCUMENT WHICH CONTAINS CONFIDENTIAL AND TRADE SECRET INFORMATION, IS THE PROPERTY OF CONTROLPOINT TECHNOLOGIES, INC., AND IS GIVEN TO THE RECEIVER IN CONFIDENCE. THE RECEIVER, BY RECEPTION AND RETENTION OF THE DOCUMENT, ACCEPTS THE DOCUMENT IN CONFIDENCE, AND AGREES THAT, EXCEPT IF AUTHORIZED IN WRITING BY CONTROLPOINT TECHNOLOGIES, INC., IT (1) NOT USE THE DOCUMENT OR ANY COPY THEREOF, OR THE CONFIDENTIAL TRADE SECRET INFORMATION THEREIN, (2) NOT COPY THE DOCUMENT, (3) DISCLOSE TO OTHERS EITHER THE DOCUMENT OR THE CONFIDENTIAL TRADE SECRET INFORMATION THEREIN, AND (4) UPON COMPLETION OF THE NEED TO RETAIN THE DOCUMENT, OR UPON DEMAND, RETURN THE DOCUMENT, ALL COPIES THEREOF, AND ALL MATERIAL COPIED THEREFROM. COPYRIGHT © CONTROLPOINT TECHNOLOGIES, INC., ALL RIGHTS RESERVED.

REV	DESCRIPTION	DATE	CADD	ENGINEER	APPROVED
1	RISER POLE LOCATION CHANGE	4/14/20	DH	TK	TK
0	INITIAL DRAWING RELEASE	8/20/19	DH	TK	TK

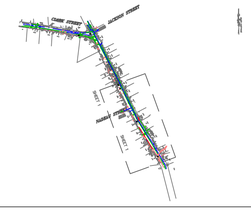

ControlPoint TECHNOLOGIES
200 LEDGEWOOD PLACE (SUITE 300)
ROCKLAND, MA 02370
TEL: (781)–423–3076
EMAIL: DHYLAND@CPTENG.COM
ENGINEER: DOUG HYLAND

nationalgrid

TJA SOLAR INTERCONNECTION
GARDNER, MA
W/R# 28039529

SCALE:	DWG NO:	SHT:	REV:
NTS	28039539	DETAILS	1

THENCE: N.89º 13' 12"W., one hundred and thirty one and 74/100 feet (131.74') to a point;
THENCE: N.00º 33' 01"W., fifty and 30/100 feet (50.30') to the point of beginning;

The parcel, owner, and area of the above described taking, is as follows:
The City of Gardner – 9,042.57 square feet

The City Council having considered the question of damages sustained by persons or corporations in their property are of the opinion that no damages have been sustained and therefore award no damages.

#10165

On a motion by Councillor Nathan Boudreau and seconded by Councillor Craig Cormier, on recommendation of the Public Service Committee, it was voted on call of the roll, eleven (11) yeas, President Scott Joseph Graves and Councillors James Boone, Nathan Boudreau, Craig Cormier, Ronald Cormier, Edward Gravel, Karen Hardern, Christine Johnson, James Johnson, Elizabeth Kazinskas, and James Walsh, to adopt the following Order:

ORDER FOR ELECTRIC CONDUIT LOCATION

By the City Council of the City of Gardner, Massachusetts

ORDERED:

Notice having been given and a public hearing held as provided by law, that the NATIONAL GRID be and is hereby granted permission to excavate the public highways and to run and maintain underground electric conduits, together with such sustaining and protecting fixtures as said company may deem necessary, in the public way or ways hereinafter referred to, and to make the necessary house connections along said extensions, as requested in petition of said company dated the 28th day of August, 2019.

Said underground conduits to be located substantially in accordance with the plan filed herewith marked – Park Street & Clark Street - Gardner, Massachusetts. Plan #28039529.

The following are the public ways or parts of ways under which the underground electric conduits above referred to may be laid:-

Park Street & Clark Street – National Grid to construct 1100 feet of conduit starting at 370 Park Street and heading north to Pole 1 Clark Street.

PUBLIC WELFARE COMMITTEE

#10164

Reporting for the Public Welfare Committee, Councillor Elizabeth Kazinskas informed the Council that the Committee studied the Ordinance and voted to recommend that AN

CITY OF GARDNER
Department of Public Works

Highway
Water
Sewer
Forestry
Parks/Playgrounds
Cemeteries

Dane E. Arnold, Director
50 Manca Drive
Gardner, MA 01440-2687
Telephone (978) 630-8195
Fax (978) 630-4029
darnold@gardner-ma.gov

Acting Mayor Elizabeth Kazinskas
City Hall, 95 Pleasant Street
Gardner, MA 01440

June 10, 2020

RE: Energy and Utilities Shortfall

Dear Acting Mayor Kazinskas:

The **Water Department** is requesting a **$1,000,000 Loan Order** for 2 Items:

Painting the Elevated Storage Tank located off Route 140
Estimated Cost $350,000 - $500,000

The Water Department painted the elevated storage tank in 2004. We recently inspected the exterior of the tank and found it is in need of pressure washing, minor repairs, and painting.

Replacing the Filters in the Crystal Lake Water Treatment Facility
Estimated Cost $350,000 - $450,000

The Pall filters located in the Crystal Lake Water Treatment Facility are approximately 14 years old and at the point where they need to be replaced. These are the main filtration filters for the City's drinking water. This estimate covers the replacement of all 177 filters at a cost of approximately $1,500 each, plus parts, and labor to install.

We will look into a short term loan (4-7 years) to pay for these improvements. We have programed this loan into our Water Forecast Budget and the existing rate structure, as voted and approved by the City Council in 2019, supports this loan <u>without</u> an additional rate increase.

If you have any questions, please feel free to contact my office.

Sincerely,

Dane E. Arnold, Director
Department of Public Works

PC: Public Service Committee
Chris Coughlin, City Engineer
Rob Oliva, Assistant Director, Department of Public Works
John Richard, City Auditor